# BG100-28

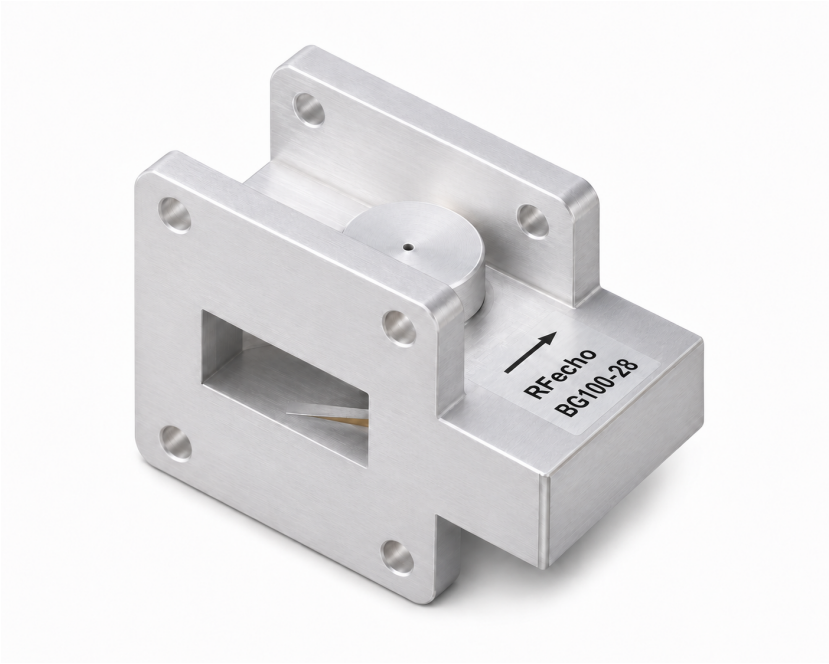


## Features

- Waveguide construction
- Frequency range: 8.2–12.5 GHz
- Insertion loss: 0.3 dB max.
- Isolation: 23 dB min.
- Interface: WR90

## Description

The BG100-28 is a flanged WR90 waveguide isolator. It provides 23 dB minimum isolation over a 10% relative bandwidth within the specified frequency range.



RFecho is trademark of Ocean Microwave
All rights reserved.
©RFecho 2025

## Technical indicators

| Frequency | Relative bandwidth | Insertion loss | Isolation | VSWR | Interface |
|---|---|---|---|---|---|
| 8.2–12.5 GHz | 10% | 0.3 dB max. | 23 dB min. | 1.2 max. | WR90 |

## Mechanical dimensions

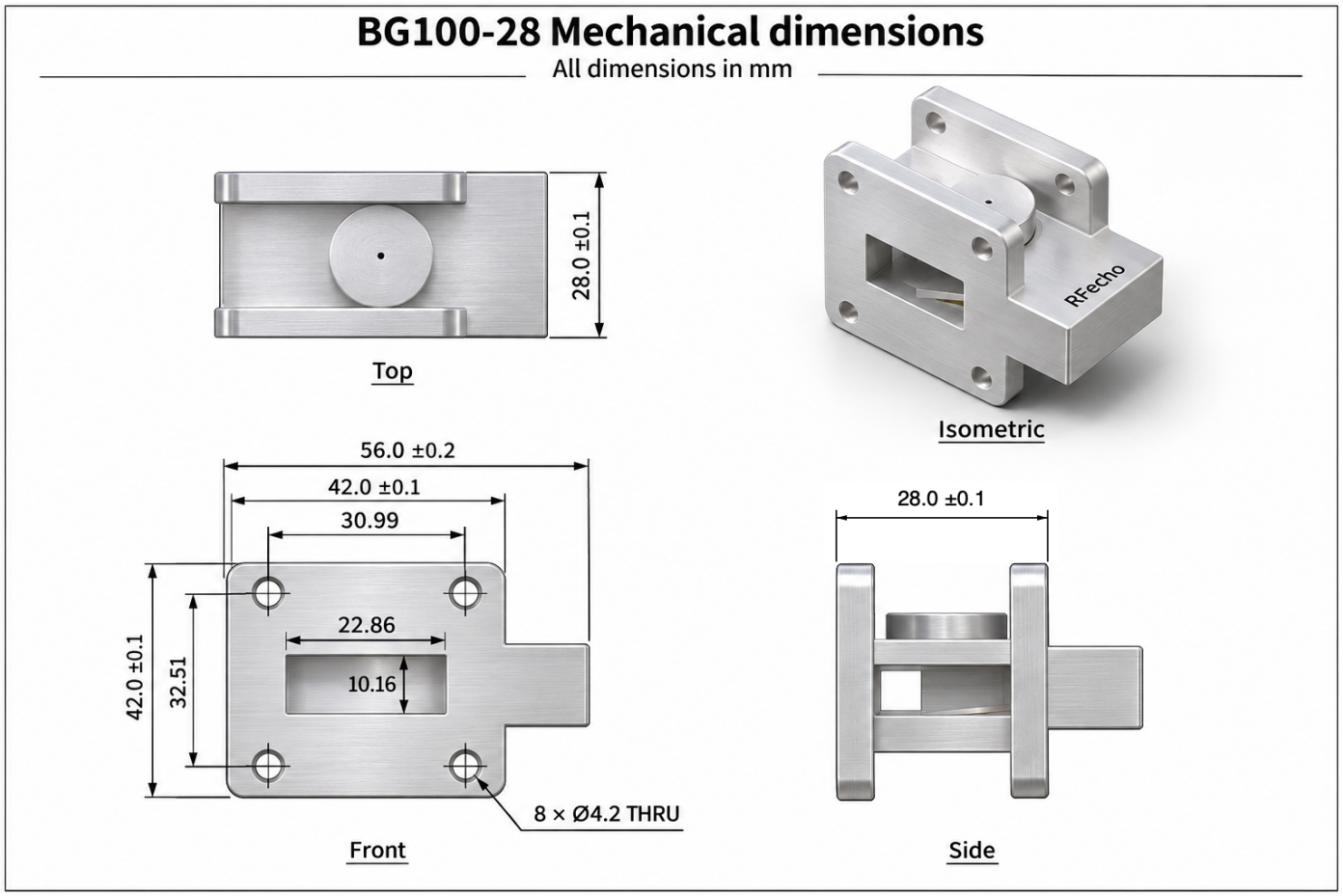




RFecho is trademark of Ocean Microwave
All rights reserved.
©RFecho 2025