OG103B-925-960



Features

- Surface-mount construction
- Frequency range: 925–960 MHz
- Isolation: 20 dB
- Insertion loss: 0.30 dB
- Forward power: 100 W

Description

The OG103B-925-960 is a surface-mount isolator for 925–960 MHz. It routes reflected RF power into its termination. The forward and reverse power ratings are listed on page 2.

RFecho is trademark of Ocean Microwave
All rights reserved.
©RFecho 2025

Technical indicators

Frequency	Return loss	Isolation	Insertion loss	IMD3	Forward power
925–960 MHz	20 dB	20 dB	0.30 dB	-60 dBc at 2 × 20W	100 W
Reverse power			**Operating temp.**		
30 W			-40 to 105 °C		

Mechanical dimensions

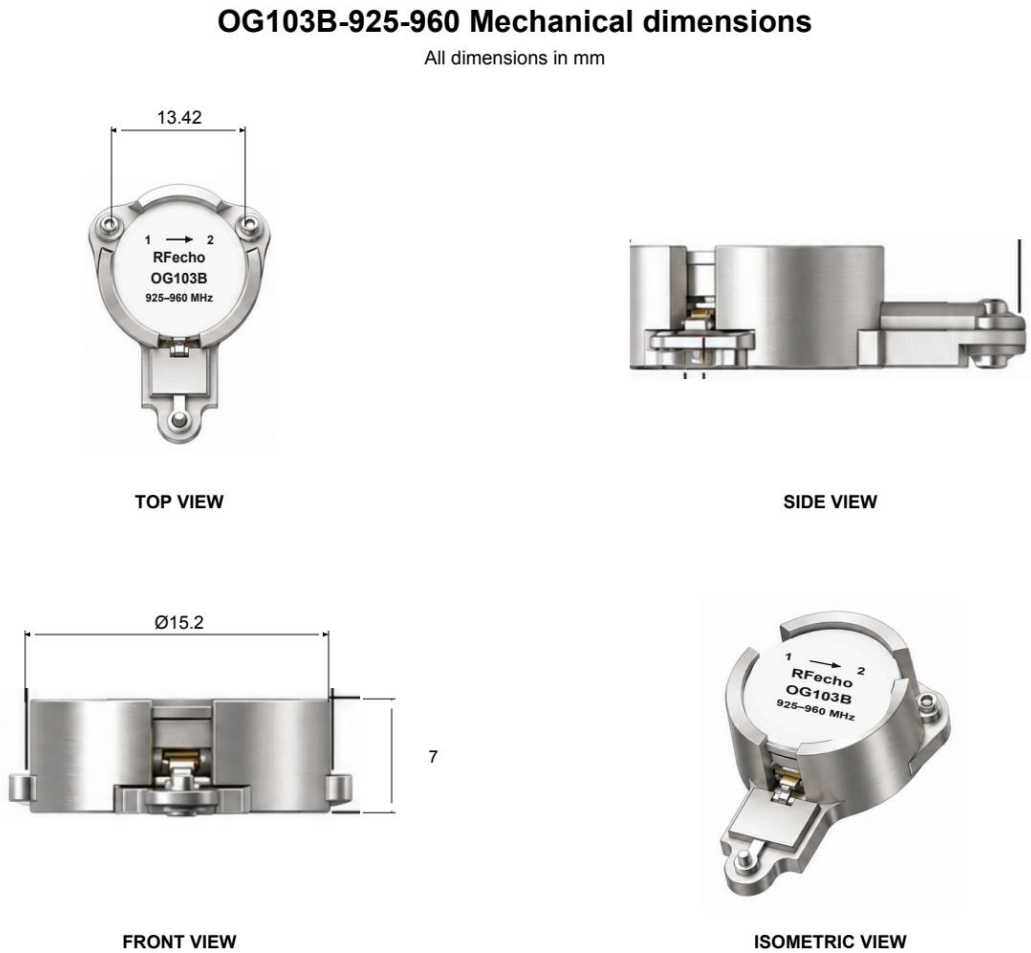

RFecho is trademark of Ocean Microwave
All rights reserved.
©RFecho 2025