OG502H-2110-2180



Features

- Drop-in construction
- Frequency range: 2110–2180 MHz
- Isolation: 23 dB
- Insertion loss: 0.25 dB
- Forward power: 160 W

Description

The OG502H-2110-2180 is a drop-in isolator for 2110–2180 MHz. It routes reflected RF power into its termination. The forward and reverse power ratings are listed on page 2.

RFecho is trademark of Ocean Microwave
All rights reserved.
©RFecho 2025

Technical indicators

Frequency	Return loss	Isolation	Insertion loss	IMD3	Forward power
2110–2180 MHz	23 dB	23 dB	0.25 dB	-69 dBc at 2 × 40W	160 W
Reverse power			**Operating temp.**		
80 W			-40 to 120 °C		

Mechanical dimensions

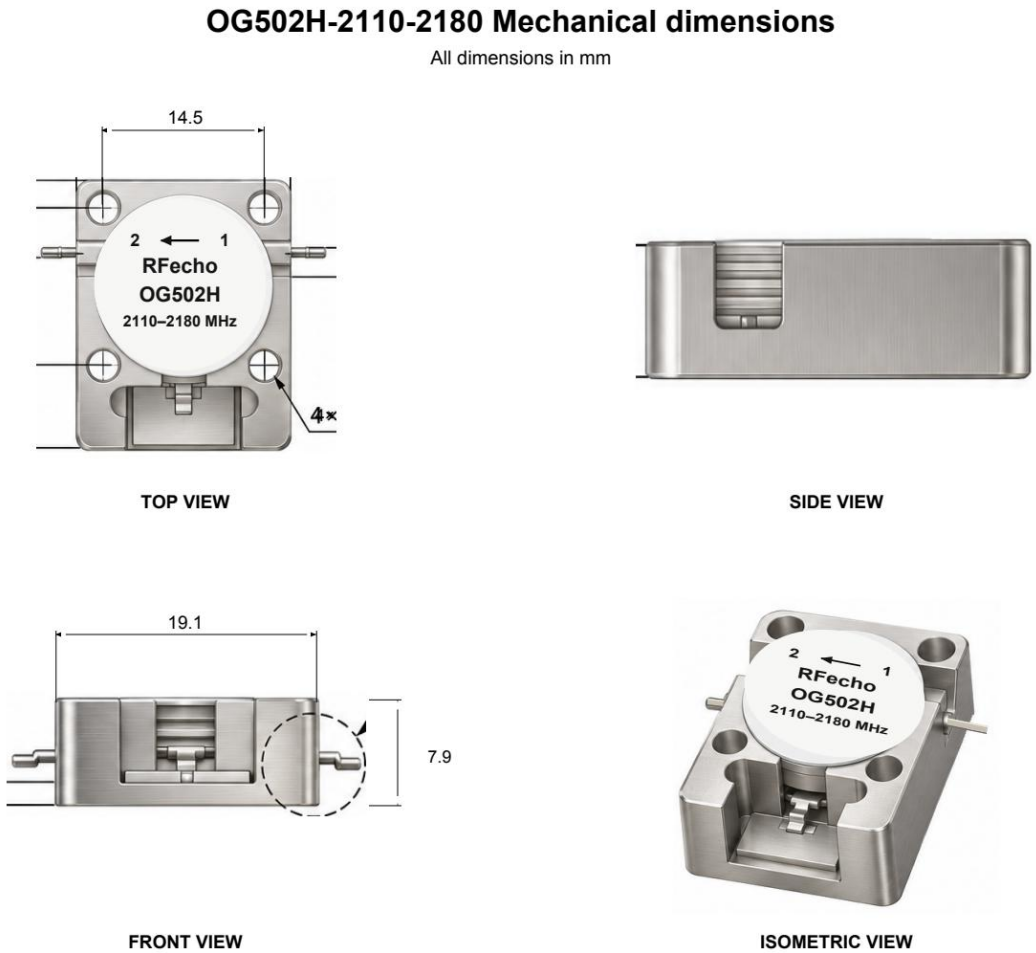

RFecho is trademark of Ocean Microwave
All rights reserved.
©RFecho 2025

RF performance

Manufacturer test trace | Catalog page 29

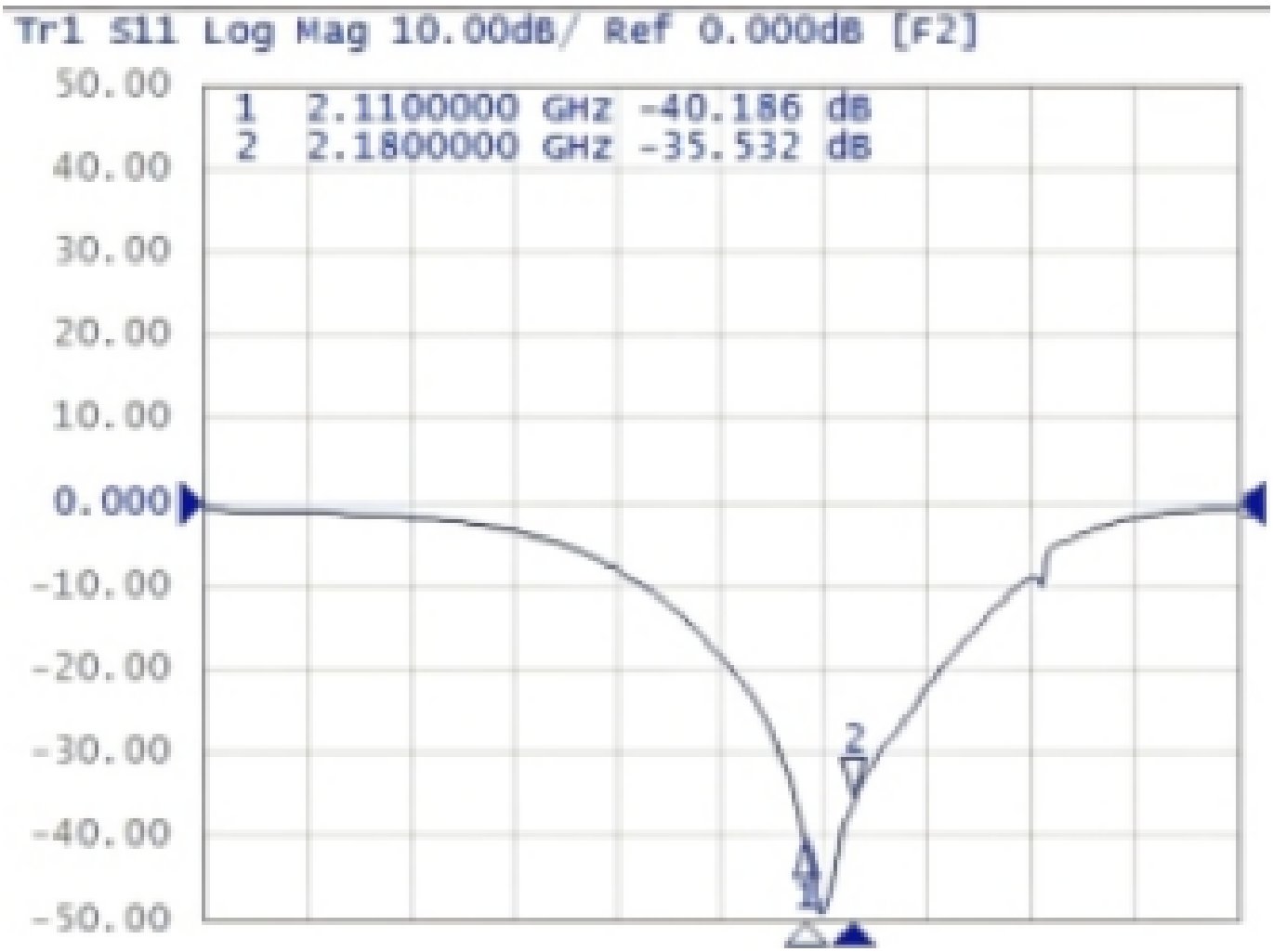

RFecho is trademark of Ocean Microwave
All rights reserved.
©RFecho 2025

RF performance

Manufacturer test trace | Catalog page 29

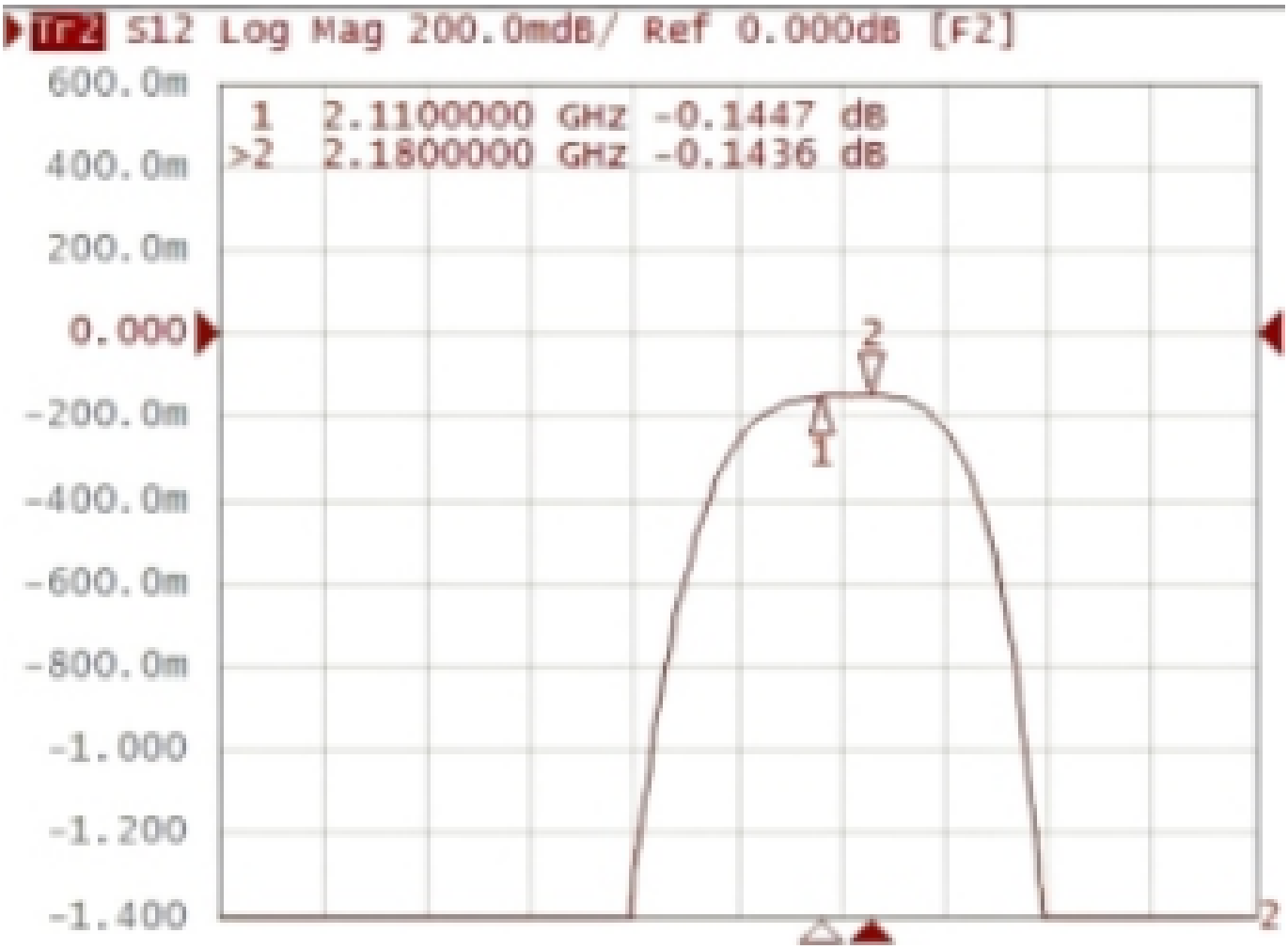

RFecho is trademark of Ocean Microwave
All rights reserved.
©RFecho 2025

RF performance

Manufacturer test trace | Catalog page 29

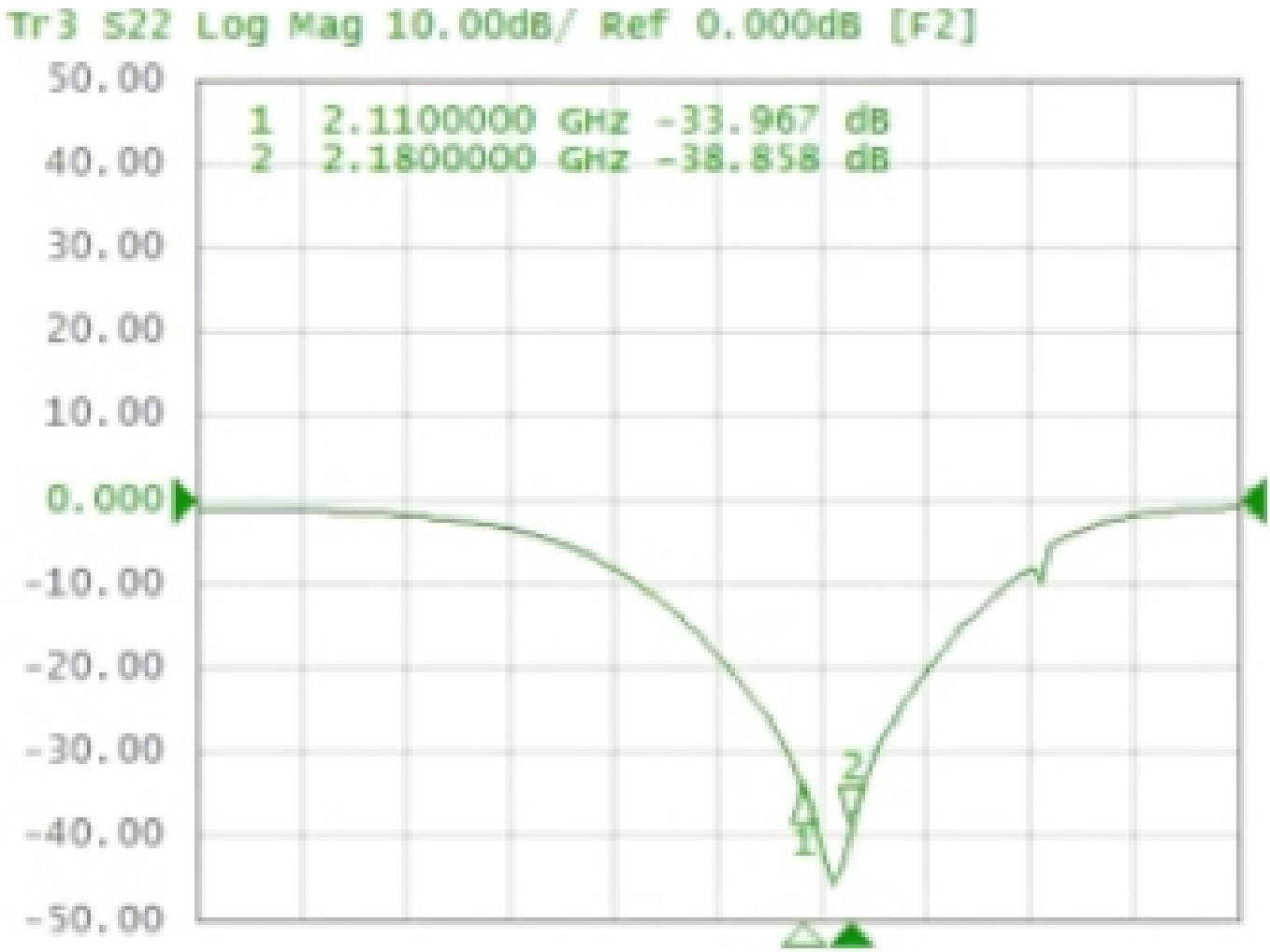

RFecho is trademark of Ocean Microwave
All rights reserved.
©RFecho 2025

RF performance

Manufacturer test trace | Catalog page 29

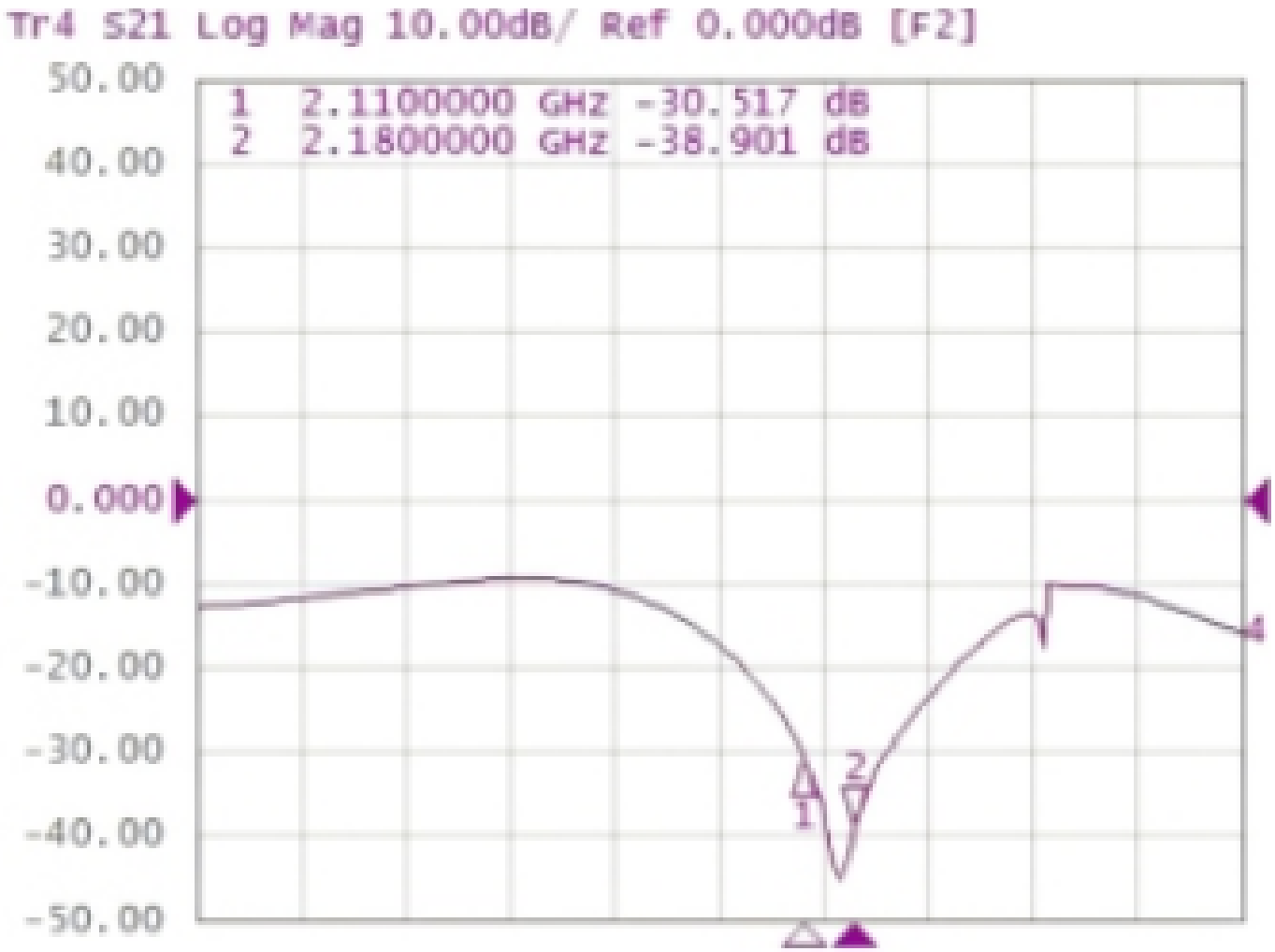

RFecho is trademark of Ocean Microwave
All rights reserved.
©RFecho 2025