WG1502A8

Microstrip isolator | 16-17 GHz

Frequency range	**16-17 GHz**
Relative bandwidth	**5%**
Insertion loss	**0.6 dB max.**
Isolation	**18 dB min.**
VSWR	**1.3 max.**
Load power	**10 W**
Interface	**GWB**

Mechanical dimensions

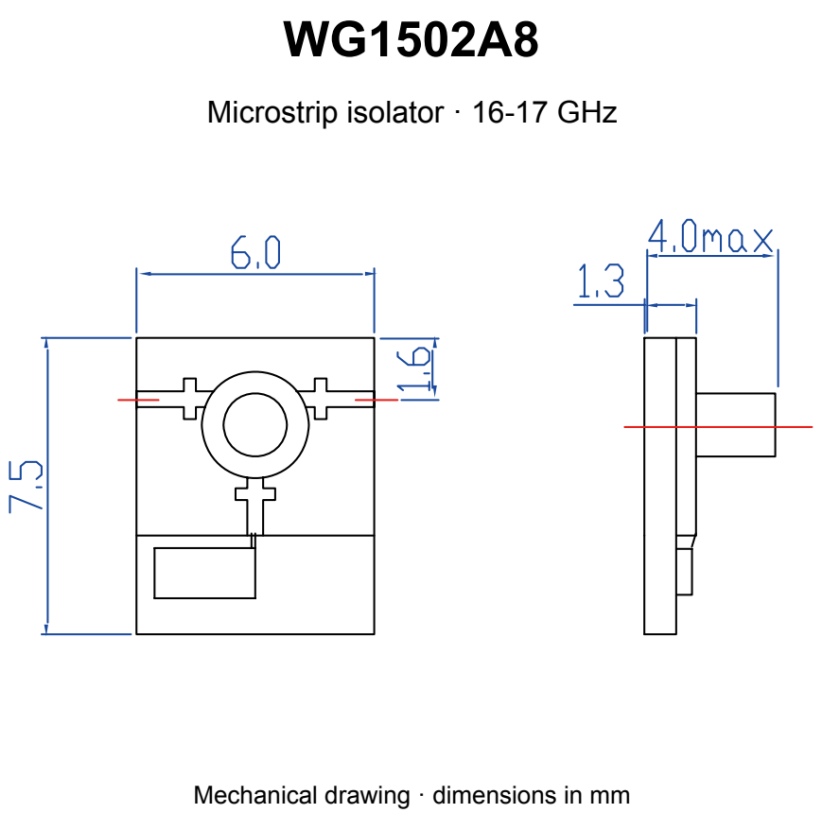

Mechanical drawing · dimensions in mm

RFecho is trademark of Ocean Microwave
All rights reserved.
©RFecho 2025